SILENTIUMPC

Spartan 4 MAX EVO ARGB
Spartan 4 MAX

CPU COOLER INSTALLATION

AMD accessories

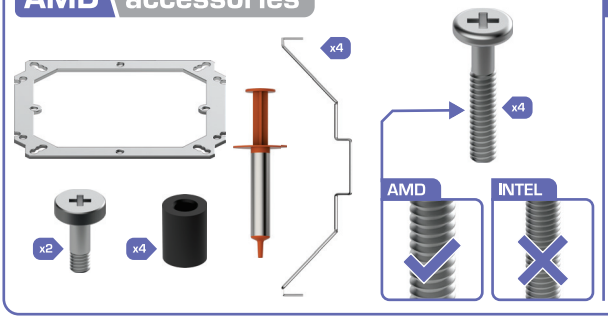

1

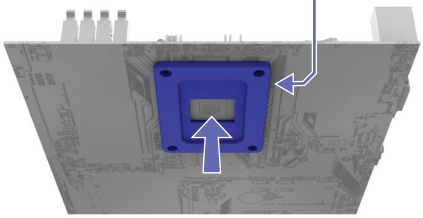

2

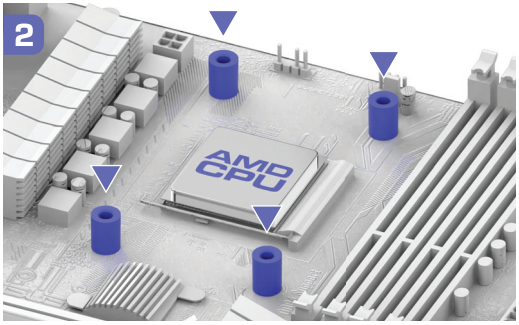

3

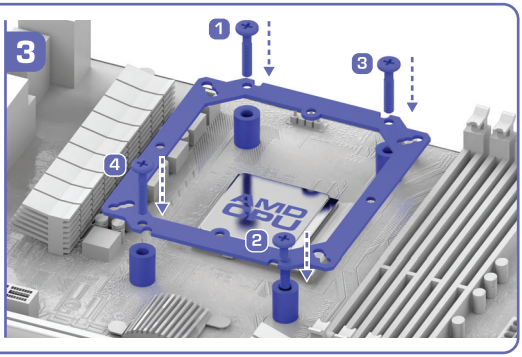

4

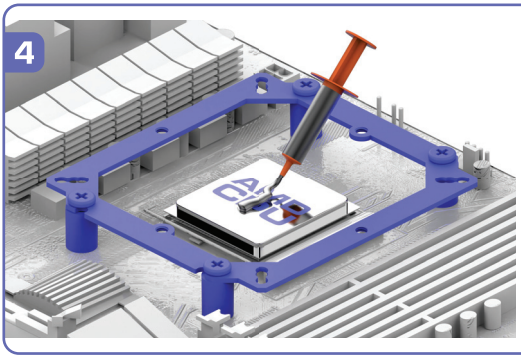

5

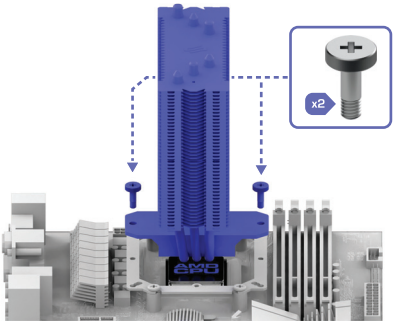

6

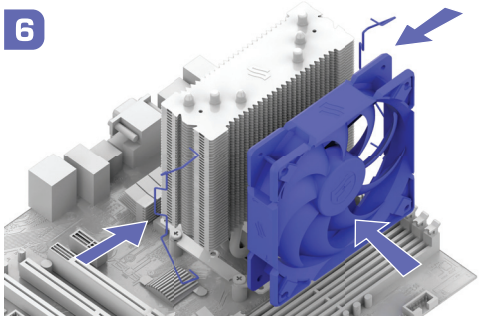

7

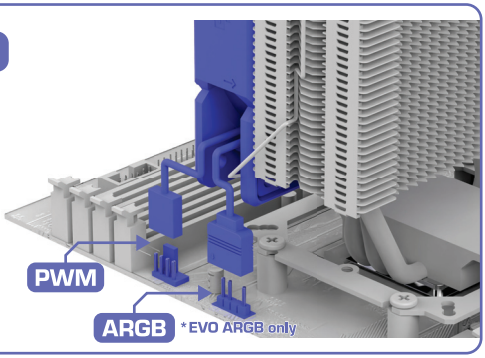

SILENTIUMPC

Spartan 4 MAX EVO ARGB
Spartan 4 MAX

CPU COOLER INSTALLATION

INTEL accessories

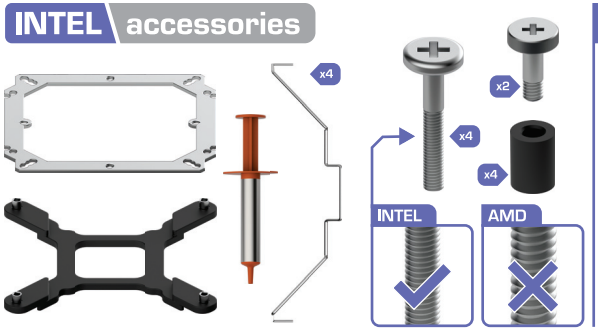

1

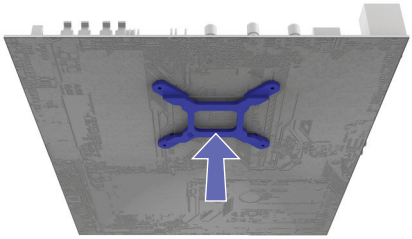

2

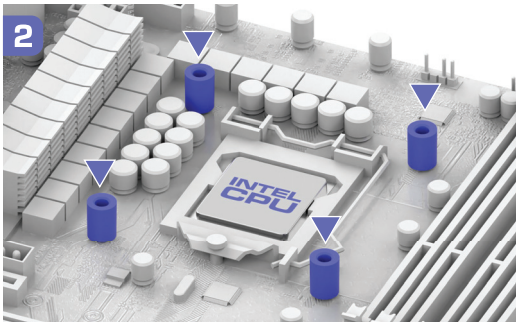

3

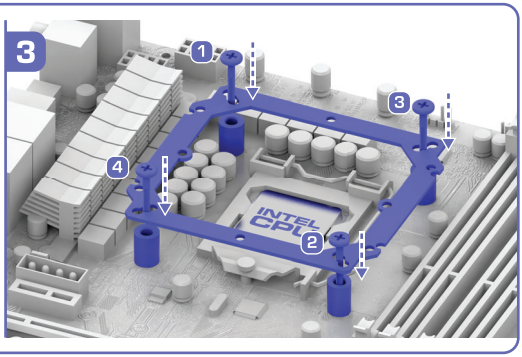

4

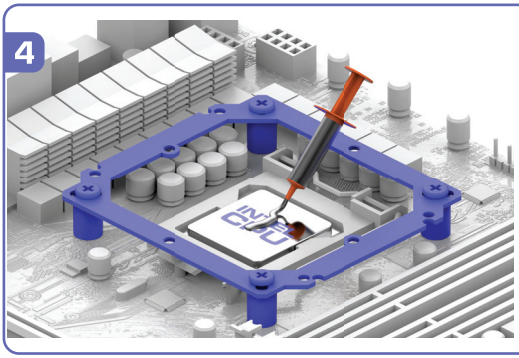

5

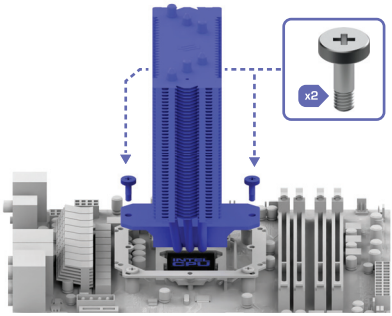

6

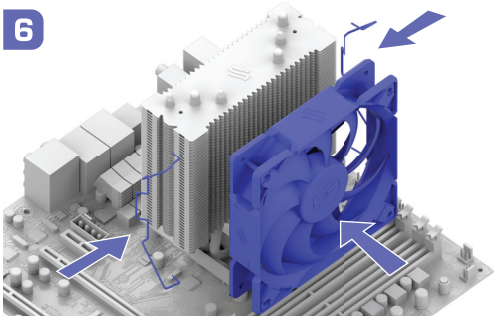
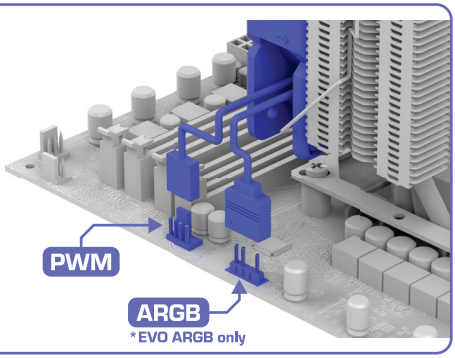
7